Designing a Miniature Spectrometer

TECHNICAL NOTE

Introduction

Traditional laboratory optical spectrometers are tabletop-sized instruments that deliver very high performance. Current-generation industrial spectroscopic analyzers[1] (near-infrared, as well as some mid-infrared and Raman) are largely derived from this laboratory spectrometer technology, and are typically housed in an environmentally controlled 'shelter', with lengthy fiber-optic runs to the actual points of measurement. The installation costs for these devices is usually estimated at three-times the price of the hardware or more – without even taking into account the total cost of system ownership, periodic maintenance, and recalibration. Thus, it is impractical to deploy them widely as spectroscopic sensors in a distributed-analysis environment. They are simply too large, too delicate, and too costly. While currently available diode-array and other miniature spectrometers[2] may seem like a plausible alternative, creating devices by merely shrinking existing technology, or employing linear array detectors has compromised range, resolution, signal-to-noise, and performance.

This technical note compares the technologies available for rugged, miniature spectrometers designed for process applications, and will demonstrate that the high-performance requirements of distributed process control in harsh manufacturing environments demand an entirely new class of devices – specifically, Axsun's NIR micro-spectrometer line.

Miniature Spectrometers

Optical spectrometers share three key components:

1) a radiation source
2) a wavelength-selective or wavelength-encoding device
3) a detector

A grating is an example of a wavelength-selective device, and a Michelson interferometer is an example of a wavelength-encoding device. Most spectrometers use a single-element detector, but others may take advantage of linear or two-dimensional array detectors. Analytical spectrometers also require a means to transport light to and from a sample, which is commonly examined in transmission or reflection. This sample may be placed between devices one and two, or between two and three, depending on the exact technology being employed.

Traditional laboratory optical spectrometers are typically housed in large enclosures (approximately two-foot, or 0.75 m-square). There are good reasons for this: in order to obtain the resolution and signal-to-noise required for laboratory applications, the optical elements within the spectrometer need to be large-scale. Therefore, the key challenge in constructing a miniature spectrometer is how to shrink the size of the device without compromising performance, especially the resolution and signal-to-noise ratio. In recent years, smaller near-infrared and visible spectrometers have been produced commercially[2]. In general, these are grating-based systems, with an 'engine' that is a few inches in each dimension, an external tungsten-halogen source, and linear array detector. A number of prototype miniature spectrometers using MEMS techniques have also been constructed or proposed,[3-6] including Fourier transform spectrometers.[7-10] Some of the gratings in the dispersive spectrometers are fabricated using the LIGA* process.[11-13]

*LIGA is a German acronym (Lithographie, Galvanoformung, Abformung) for lithography, electroplating, and molding.

Sources

Near-infrared spectrometers traditionally use a tungsten-halogen light bulb as the source. Depending on the instrument, these can draw from 10 to 50 watts (W), and they are large-area, incoherent, sources; that is, there is no fixed-phase relationship between the photons emitted by the light source. Tungsten-halogen bulbs emit a continuum of radiation from the far-infrared, through the near-infrared and visible, to the ultra-violet, and do so in all directions. Only a small portion of the emitted light is typically captured by source optics, and only a small portion of *that* actually falls in the desired region of the near-infrared. Therefore, they are energy-inefficient devices and, moreover, shrinking their size and power output dramatically reduces the sensitivity of the spectrometer: as the power of the source drops, so too will the signal-to-noise ratio.

Wavelength-Selective and Wavelength-Encoding Devices

Using traditional sources, two approaches have been used to increase the sensitivity of optical spectrometers: multiplex techniques and array detectors. It is well-known that for a given size of optics, a Fourier transform spectrometer will have better signal-to-noise than a scanning-grating spectrometer, due to the throughput (or Jacquinot) and multiplex (or Fellget) advantages. It also has the advantage of a built-in internal wavelength reference, typically a He-Ne laser. Although small, palm-sized interferometers[15] were made 40 years ago, minimizing the size of this device has two serious consequences: first, lowering its throughput, or the amount of optical power transmitted (this will be proportional to the mirror areas, or roughly to the square of the linear dimension of the instrument), and second lowering the resolution, as this is linearly dependent on the displacement of its moving mirror.

Fourier transform spectrometers found their widest application in the mid-infrared region, but dedicated near-infrared versions have been produced in recent years. In the near-infrared region, the throughput advantage is maintained, but as detectors move from the detector-noise-limited to the shot-noise-limited regime, the multiplex advantage disappears[16], so that an interferometer no longer has a dominant advantage over a grating. Another drawback is that Fourier transform spectrometers tend to be very sensitive to their environments, in particular to temperature variation and vibration, because of the very tight tolerances inside the interferometer. Various schemes have been designed to mitigate these effects, including thermostatting the interferometer and dynamic alignment, but the inherent sensitivity makes these instruments unsuitable for process applications, unless they are located within an environmentally controlled shelter.

Dispersive, or grating, spectrometers suffer from similar limitations as their size is diminished: first, lowering their throughput, or the amount of optical power transmitted, and second lowering their resolution. This can be partially mitigated by changing the overall design from a scanning grating/single element detector to a static grating with a linear array detector.

Diode Array Detectors

Scanning grating instruments may have a resolution of 0.5 nm (~2 cm^{-1}), or may be designed for significantly lower resolutions (10 nm or ~40 cm^{-1}), with a scan speed of one or two scans per second. By contrast, small InGaAs-array-equipped spectrometers can acquire a spectrum in a fraction of that time. Depending on the wavelength region, photodiode arrays (PDAs), charge coupled devices (CCDs), or Indium Gallium Arsenide (InGaAs) detector arrays can be employed for spectroscopy. A grating spectrometer engine operating in the visible and ultra-violet range can be low cost (around $2,000), owing to the wide commercial availability of CCD arrays, but the addition of an InGaAs array for near-infrared operation to 1.7µm can raise the price to around $20,000[2].

However, InGaAs arrays also have applications limitation because of their spectral-range coverage. For these spectrometers to cover the longer wavelength near-infrared region beyond 1.7µm requires the use of an 'extended' InGaAs detector, with lower specific detectivity (D*) and orders-of-magnitude higher dark current. InGaAs arrays with 128 pixels have been commonly employed, but instruments with 256, and even 512, pixels are now becoming available.[17-19] Although logical to assume that 256 pixels covering the range of 1120 nm to 2100 nm would imply a resolution of 4 nm, the practical resolution attained is actually at much worse – around 12-15 nm. This is for two reasons – (1) at least three points are required to define and resolve a band, and (2) these devices are not perfect; there is 'leakage' or 'crosstalk' between pixels. That is, the signal on one pixel affects the signal on its neighbors, which has deleterious consequences in qualitative and quantitative analyses. The effect of reduced resolution in a spectrum can be seen in Fig. 1. This leakage, or crosstalk, also affects detector linearity, and thus the accuracy, of quantitative measurements

Tungsten-Halogen Sources

The position of the peak in the black-body curve is given by Wien's displacement law[14]:

$$\nu_{max} = 1.961\ T$$

Where ν_{max} is in units of cm^{-1}

A tungsten-halogen lamp operates at ~ 3000K, so that

$$\nu_{max} = 5900\ cm^{-1} \text{ or } 1.7\mu m$$

At first sight, it appears that these sources are well-suited for near-infrared spectrometers. However, for all spectrometers using these sources, the *power emitted per unit area of the source* will be the same, so as the area drops, so does the emitted power. The useful power emitted by the source is proportional to:

$$= A \bullet \Omega$$

Where

A is the area of the source imaged by the source collection mirror

Ω is the solid angle collected by the source mirror

$A \bullet \Omega$ is sometimes called the 'ėtendue' or the 'optical invariant', and in any optical system, it is possible to ***diminish*** $A \bullet \Omega$, but not to ***increase*** it. In an ideal optical system, $A \bullet \Omega$ will be conserved throughout: from the source to the sample, to the detector, via the dispersive or multiplexing device. This means that the beam can be focused down to a smaller spot than the source or the sample, but only if the solid angle increases proportionally. If efficient source collection optics are used, a 2:1 demagnification at the detector is all that is practical. In diffuse-reflectance studies, a large sample area can be illuminated, and it will typically scatter light over a 2π solid angle. In effect, the sample now becomes the source, and most likely, a very dim source. Therefore, the use of a large area detector is a distinct advantage, and this is possible in pre-dispersive (wavelength selection before the sample) spectrometers and Fourier transform spectrometers. However, in a post-dispersive spectrometer (*e.g.,* diode array) the detector elements (individual pixels in the array) are designed to be as small as possible. This makes diode-array spectrometers fundamentally poorly-suited to diffuse reflectance measurements.

Axsun's Wavelength Referencing

Real-time wavelength and source referencing are performed in a dedicated, termed WARM™: Wavelength and Amplitude Reference Module (Fig. 2). Every point of every scan is referenced, resulting in unparalleled long-term stability. Part of the beam from the tunable source module is split-off via a beamsplitter and directed through a quartz etalon and onto a detector. As the spectrometer scans, the signal from the detector is a fringe pattern, analogous to the He-Ne reference signal in an FT-IR. This provides real-time wavelength referencing. The optical bench in the WARM™ module is also thermostat-controlled, ensuring both short- and long-term dimensional stability for the etalon, and thus both short- and long-term wavelength reproducibility. A second beamsplitter splits off another portion of the light, directly to a detector. This provides real-time source amplitude referencing. Very few commercial spectrometers incorporate source referencing, and it is well-known that the output intensity of tungsten-halogen lamps drops over time, which leads to problems in process installations where reference spectra can only be collected at very infrequent intervals, possibly months apart.

The Effect of Resolution

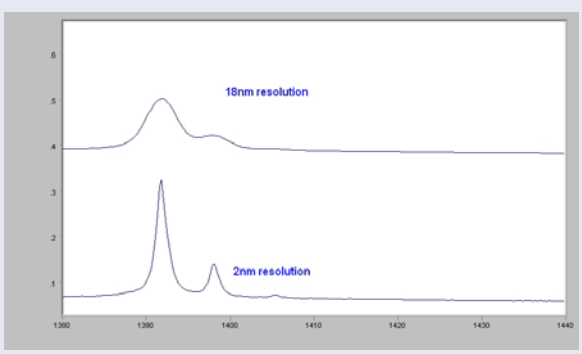

Figure 1. The near-infrared spectrum of talc [hydrated magnesium silicate, $Mg_3Si_4O_{10}(OH)_2$], measured at 2 nm resolution (Axsun spectrometer) and at 18 nm resolution (typical of a diode array spectrometer). The loss of spectral contrast, intensity and overall detail can be clearly seen.

Talc is a significant industrial chemical, and is used as a constituent of myriad products: as a pharmaceutical excipient, filler in plastics and paper; ceramic coatings; paints; cosmetics; detergents and even animal feed.

Axsun's WARM™ Technology

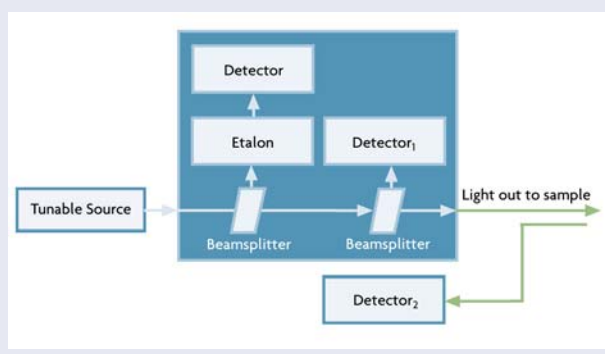

Figure 2. A block diagram of Axsun's WARM™ technology. Real-time wavelength and source referencing are performed: every point of every scan is referenced, resulting in unparalleled long-term stability. Signals from these two detectors are digitized using matching 24-bit A/D converters.

All array detectors suffer from fixed pattern readout noise[19], which results from non-uniformity in the detector material from pixel to pixel, and distortions in the array readout circuitry. This noise is non-random, and will not be reduced as scans are co-added. For larger arrays, this can lead to a 'zig-zag' pattern across the spectrum.

Finally, unlike a Fourier transform spectrometer, there is no inherent wavelength reference in a grating/diode-array system. The physical size of the spectrometer (slit, grating, array) makes it susceptible to vibrations, and also to drift as the temperature varies and materials expand. While these diode-array spectrometers have been deployed in process applications, their inherent performance limitations make them a less-than-an-ideal choice. Unfortunately, there has been no real alternatives – that is, until now.

The Axsun Solution

Axsun's micro-spectrometers employ a semiconductor light source, a scanning filter, and a single-element detector; light is carried to and from the sample via fiber optics, and a wide variety of accessories, cells, and probes can be used as the sample interface.[22,23] The optical components are manufactured using semiconductor techniques, ensuring part-to-part reproducibility.

Source

The micro-spectrometer employs semiconductor-based light sources, typically a superluminescent light-emitting diode[24] (SLED) (Fig. 3). A SLED is a ridge-waveguide light emitting diode (LED) pumped at high current levels so that stimulated emission occurs. These light sources are commercially available from a number of vendors in the traditional telecommunications region of the spectrum and can also be fabricated for use at longer wavelengths into the information-rich 'combination band' area[21] of the near-infrared spectrum. These are miniature semiconductor light sources, and are approximately 1,000-times brighter than a tungsten-halogen light bulb, which makes them well-suited for use in a miniature spectrometer. Connecting a light bulb to these miniature optics does not yield a useful device – it is simply not feasible to couple enough light from this large incoherent source into the optical fibers and optical components used. A SLED is a very energy-efficient device: the light output is not governed by Bose-Einstein or 'black-body' statistics, as are incandescent sources; it emits light only in the spectral region for which it is designed; and the beam is small and coherent, so that all the light can be captured by miniature optics. These advantages make a SLED an ideal source for a miniature spectrometer, with low power consumption. Because they are semiconductor devices, SLED sources are designed for a 25-year lifetime, so that no servicing is required. More importantly for process applications, that means that recalibrations are not required, as they are when a tungsten-halogen bulb is replaced on a conventional spectrometer.

Although SLED sources were originally commercialized for use in telecommunications applications, around 1550 nm, Axsun has developed sources that cover the range from 1320 – 1970 nm. These are key regions in the near-infrared spectrum, spanning the first O-H and N-H overtones around 1450 – 1500 nm, the first C-H overtone in the 1650 – 1750 nm region, and the water combination band around 1900 – 1950 nm. Coverage of these regions enables analysis of all organic compounds (Figure 4). By combining semiconductor light sources with all the other miniature optical components that Axsun has developed, it is possible to make near-infrared tunable lasers.[25] A discussion of this technology is beyond the scope of this technical note, but tunable lasers of this type have a power output approximately 10^6 greater than a tungsten-halogen light bulb, and are therefore attractive sources for spectroscopy, especially in highly 'lossy' applications, like diffuse reflectance of solids.

Wavelength-Selective Device

A unique MEMS tunable filter is the key component of this micro-spectrometer.[26] The MEMS tunable Fabry-Perot filter consists of two mirrors, either plane or curved, facing each other and separated by a distance *d.* When a Fabry-Perot cavity is on resonance, constructive interference within the cavity allows transmission of essentially 100% of the light through the filter. When the cavity is off-resonance, the Fabry-Perot filter reflects nearly all the incident light. The condition for constructive interference within a Fabry-Perot interferometer is that the light forms a standing wave between the two mirrors, in which case the optical distance between the two mirrors must equal an integral number of half wavelengths of the incident light. Changing the mirror separation by applying voltage to the MEMS structure tunes the transmitted wavelength of a Fabry-Perot interferometer. Because of the extremely small size and low mass of the movable mirror, the mechanical resonant frequency of the filter is over 100 kHz. The filter can be scanned over its entire range in less than 50 µs. Putting the SLED together with the MEMS tunable filter, we have a miniature, high power, and efficient, tunable light source.

Detector Sensitivity

The sensitivity of a particular detector is usually defined in terms of the *Noise Equivalent Power* or NEP. Simply put, this value is the power incident on the detector so that a signal-to-noise of unity is achieved. NEP is dependent on the area of a detector, with larger detectors having larger noise. NEP is measured in units of W $Hz^{-1/2}$, and is formally defined for a particular modulation frequency, wavelength, and effective noise bandwidth. The lower the NEP, the better the detector.

In order to compare detector materials, independent of area, the Specific Detectivity, or D* (D-star), is defined as:

$$D^* = A^{1/2} / NEP$$

and is measured in units of cm $Hz^{1/2}$ W^{-1}. The higher the D*, the better signal-to-noise the detector will have. Formally, the D* is the signal-to-noise ratio at a particular electrical frequency, in a 1 Hz bandwidth, when 1 Watt of radiant power is incident on a 1 cm^2 active area detector.

In the near-infrared, the most common detector is the Indium Gallium Arsenide (InGaAs) PIN photodiode. A PIN photodiode is a semiconductor positive-negative (P-N) structure with an intrinsic (I) region sandwiched between the other two regions. InGaAs typically has a range from 0.8 µm to 1.7 µm, but 'extended' InGaAs detectors are available with typical cut-off options of 1.9 µm, 2.2 µm, 2.4 µm, and 2.6 µm[20]. However, the D* for these detector materials drops steadily as the wavelength cut-off is extended, and typical values are 5 x 10^{12} for 1.7 µm, 2 x 10^{11} for 2.2 µm, and 5 x 10^{10} for 2.6 µm, all in units of cm $Hz^{1/2}$ W^{-1}, and measured at 1 KHz. So a penalty is paid in terms of signal-to-noise ratio for extended wavelength coverage. Single-element InGaAs detectors are coupled to a transimpedance amplifier, and then to an analog-to-digital (A/D) converter. The transimpedance amplifier and A/D are typically provided by the spectrometer manufacturer. Use of a 16-bit A/D is common; however Axsun uses 24-bit A/Ds for greater dynamic range.

Detector arrays are usually specified differently, because of their different readout and amplification. A typical linear array has between 128 and 512 detector elements, or pixels, and these are typically 50 µm wide and 500 µm high –designed for use with slit-based grating instruments. The pixel spacing is referred to as the 'pitch', and efforts are made to minimize any gaps between pixels. The ratio of total pixel width to length of the array is termed the 'fill factor', and for modern arrays this is close to 100 percent. One or more A/D converters are typically located on the array package itself. These are commonly 14-bit, but recently some 16-bit converters have been used[18]. The key parameter than governs the signal-to-noise ratio of an array is its dark current: the current through the detector pixel, under normal operating conditions, with no incident radiant power. The typical dark current in InGaAs arrays increases from 0.08 pA for a 1.7 µm array to 1000 pA for a 2.6 µm array, which is factor of 12,500 in increased noise[20]. This is a major penalty to pay for the extended range. The dark current can be reduced by cooling the array, and a recently available spectrometer, using a 2.2 µm array and a 16-bit A/D, quotes 800 counts dark current out of 65536 (2^{16}) total counts. This translates to a best signal-to-noise for a single scan of 82, or 1.2% noise[18].

Semiconductor Light Sources

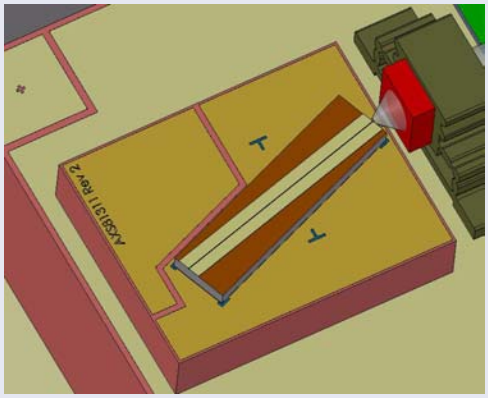

Figure 3. Axsun uses SLED sources, which are highly energy-efficient, and are designed for a 25-year lifetime

Detector

The detector is a single-element, thermoelectrically-cooled, InGaAs PIN photdiode, whose long-wavelength cut-off is selected according to the targeted spectral range being used. Because the spectrometer is pre-dispersive (i.e., wavelengths are selected before the sample), the area of the detector can be selected according to the application and sampling technique. Small area detectors can be used for transmission, and these can be very fast, with a bandwidth from DC to 10 GHz. In the case of diffuse reflectance, we have seen above that the sample becomes the source, and this can be a large area, dim source. In this case a large area detector is employed, to preserve as much of the A.Ω product as possible. Although extended versions have higher NEP, we use bright sources so that incident power is high, and a 24-bit A/D converter for maximum dynamic range. Therefore we obtain excellent S/N ratios in a 30ms single scan, larger than 3000:1.

Integration

All the components are affixed to a 14-mm-long aluminum nitride optical bench that sits atop a thermoelectric cooler, and all optical coupling on this bench is via free-space micro optics. Collection fiber(s) deliver transmitted or reflected light back to the spectrometer, where the single-element InGaAs detector and transimpedance amplifier convert the light into electrical signals for processing.

Automated production tools are used to manufacture these functionally dense optical modules, with placement and attachment of individual components to the bench performed using pick-and-place machines[27, 28]. These enable automated placement of devices with alignment precision of better than 3 μm, with attachment to the bench using eutectic solders. No epoxies are used inside the hermetically sealed package, as outgassing can adversely affect the performance of both active and passive optical elements. A proprietary robotic alignment tool is used in conjunction with the LIGA fabricated alignment structures for active alignment. This process can be carried out in a matter of seconds, under automated machine control, with placement precision better than 0.1 μm. These procedures ensure both accurate and highly reproducible alignment of components, orders of magnitude better than can be achieved by conventional methods, with traditional-size optics, and are another factor contributing to the ability to transfer calibrations from spectrometer to spectrometer.

The optical bench is controlled by a digital signal processor (DSP), and signals from the detectors (main signal, wavelength reference, power reference) are passed to 24-bit analog-to-digital converters. The resulting spectra are passed to a PC (via serial, USB, Ethernet, or wireless links) running an ActiveX control. This control can be interfaced to any modern PC application; in this work it was run from GRAMS (ThermoElectron, Waltham, MA), and the spectroscopic data were worked up and presented using that software. The total power draw of the spectrometer is around 10 W – about the same as just a low power source bulb from a conventional spectrometer!

Conclusion

Axsun designed its high-resolution NIR Analyzer to target the specific portions of the spectrum that feature sharper and better-resolved bands – the first overtone regions of the carbon-hydrogen stretching and the oxygen-hydrogen stretching modes. This region is key for the qualitative and quantitative analyses of virtually all organic compounds (aliphatic and aromatic), in all phases (gas, liquid, and solid). Axsun micro-spectrometers are also essentially identical to each other, allowing direct transfer of quantitative analysis models from instrument to instrument.

Miniature, rugged, and reliable, Axsun's micro-spectrometer technology has immediate application in industrial quality assurance and control, particularly in the emerging field of distributed process analytical spectroscopy in the chemical and pharmaceutical industries. Unlike existing diode array-based process systems that sacrifice range and performance, Axsun's instruments offer speed, signal-to-noise, and resolution comparable to a laboratory FT-NIR. Because they are essentially immune to effects of vibration and temperature extremes, they can be deployed anywhere within the process environment without the disruption and expense of large-scale plant investment in plant infrastructure or consumables. This technology represents a paradigm shift for industrial spectroscopy, and enables a variety of new industrial applications.

Shortwave Near-Infrared

A key point in any spectroscopic analysis is to choose the region of the spectrum in which to collect the data. The second and third C-H stretching band overtones are around 1100 and 900 nm, in a region commonly called the shortwave near infrared. This region has been used for near-infrared analyses, especially of liquids, and in the third overtone region can employ CCD detectors. CCD detectors have excellent specific detectivities, are available in large formats, and are comparatively low cost, owing to their use in consumer devices. So a reasonable question is, "Why not use this region?"

The major reason lies in band intensities: band intensities in the second overtone are ~10 less than first overtone, and in the third overtone are ~100 less than first overtone[21]. For clear liquids, the pathlength of the sample can be increased to work in this region. However, the amount of spectral detail diminishes in the second and third overtones, and therefore spectral discrimination is reduced[21].

The major reason why this region has not been used more extensively is because in solid-phase analysis of fine chemicals and mixtures, typically by diffuse reflectance, there is no straightforward way to increase the pathlength – the 'pathlength' is a property of the material, and is dependent on particle size, packing, etc. Efforts can be made to collect only highly oblique return rays, which have traveled through a long path in the solid, but this is at the expense of overall signal, and a poor signal-to-noise spectrum results. Therefore, the second and third overtones are always weak features in the spectrum, and the optimum region is the first overtone, approximately 1600 – 1800 nm (Fig. 4). The region from 1800 – 2500 nm brings into play 'combination bands'. These arise from transitions in the molecule that involve both fingerprint bands (like the C=O carbonyl stretch), and the more familiar C-H, N-H and O-H stretching modes. These combination bands tend to be stronger than the first overtone C-H, carry more molecular information, and therefore there are distinct advantages to working in that region. However, as we have seen, the specific detectivity of detectors falls off at longer wavelengths. Also, water interference, both water vapor and water in silica windows and fibers, becomes significant. All the trade-offs need to be considered.

Targeted-Range Analysis

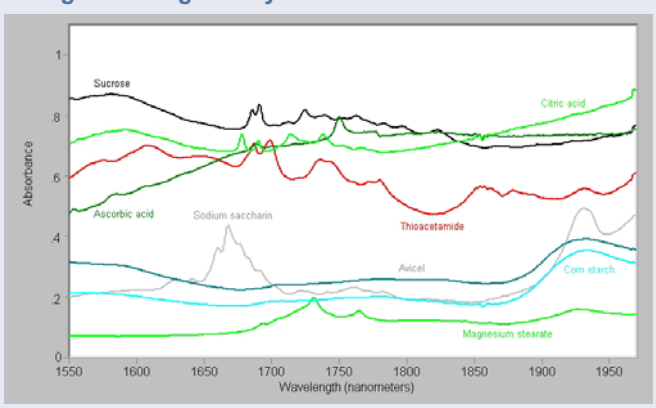

Figure 4. The 1600 – 1800 nm region covers the first C-H overtone, while the water combination band can be observed at around 1930 nm. Therefore, a spectrometer covering this region can analyze all organic chemicals.

References

1 D. Christian Hassell, and Elizabeth Bowman, "Process Analytical Chemistry for Spectroscopists", Applied Spectroscopy **52**, 19A-29A (1998).

2 James P. Smith, "Spectrometers Get Small", Analytical Chemistry, **72**, 853A-858A, (2000).

3 Reinoud F. Wolffenbuttel, "State-of-the-Art in Integrated Optical Microspectrometers", IEEE Trans. Instrum. Meas., **53**, 197-202 (2004).

4 P. C. Montgomery, D. Montaner, O. Manzardo, M. Flury and H. P. Herzig, "The metrology of a miniature FT spectrometer MOEMS device using white light scanning interference microscopy", Thin Solid Films, **450**, 79-83 (2004).

5 Jarek Antoszewski, John Dell, Thananjeyan Shivakumar, Mariusz Martyniuk, Kevin Winchester, Justin Wehner, Charlie Musca and Lorenzo Faraone, "Towards MEMS based infrared tunable micro-spectrometers", Proc. Soc. Photoinst.Opt. Eng. **4935**, 148-155 (2002).

6 Andrzej Barwicz, "Functional and technological integration of measurement microsystems", IEEE Instrumentation & Measurement Magazine, **7(2),** 14-19, June 2004.

7 Omar Manzardo, Hans Peter Herzig, Cornel R. Marxer and Nico F. de Roonij, "Miniaturized time-scanning Fourier transform spectrometer based on silicon technology", Optics Lett., **24**, 1705-1707 (1999).

8 Omar Manzardo, Roland Michaely, Felix Schädelin, Wilfried Noell, Thomas Overstolz, Nico de Rooij and Hans Peter Herzig, "Miniature lamellar grating interferometer based on silicon technology", Optics. Lett. **29**, 1437-1439 (2004).

9 G. Jodor, M. Sirota, H. Riris, W. Hasselbrack, "A MEMS-based Fourier transform spectrometer", Fourier Transform Spectroscopy, Optical Society of America Trends in Optics and Photonics, **84**, 55-58 (2003).

10 Peter Krippner, Thomas Kuehner, Juergen Mohr, and Volker Saile, "Microspectrometer system for the near-infrared wavelength range based on LIGA", Proc. SPIE, **3912**, 141-149 (2000).

11 Jűrgen A Mohr, Arndt Last, Uwe Hollenbach, Toru Oka and Ulrike Wallrabe, "A Modular Fabrication Concept for Microoptical Systems", Journal of Lightwave Technology, **21**, 643-647 (2003).

12 Desmond Brennan, John Alderman, Linda Sattler, Barry O'Connor, and Cian O'Mathuna, "Issues in development of NIR microspectrometer system for on-line process monitoring of milk product", Measurement, **33**, 67-74 (2003).

13 F. Gindele and C. Novotny, "Miniaturized fiber–coupled optical spectrometers with temperature compensation based on injection moulding", Proc SPIE, **4943**, 47-58 (2003).

14 See, e.g., G. W. Chantry, Long Wave Optics, Academic Press, 1984, pp 62-74.

15 See, e.g., P. R. Griffiths, Chemical Infrared Fourier Transform Spectroscopy, John Wiley, 1975, pp 99–100.

16 See, e.g., G. W. Chantry, Long Wave Optics, Academic Press, 1984, pp 338-340.

17 T. Beurmann, R. Wittwer and M. Wohlfarth, "Application Comparison of NIR Spectrometers: Fourier Transform (FT) Versus Diode Arrays", G. I. T. Laboratory Journal, **2004(6),** 40-42.

18 See, e.g., J&M Analytishe Mess- und regeltechnik GmbH, www.j-m.de

19 George A. Gasparian and Peter M. Schaeffer, "Advances in InGaAs Multi-element Linear Arrays, Proc of SPIE, **3589**, 29-37 (1999).

20 See e.g., Judson Technologies, www.judsontechnologies.com

21 Charles E. Miller, "Chemical Principles of Near-Infrared Technology", Chapter 2 in Near Infrared Technology in the Agricultural and Food Industries, Phil Williams and Karl Norris, Eds., American Association of Cereal Chemists, St. Paul, Second Edition, 2001.

22 P. Kotidis, W. Atia, M. Kuznetsov, S. Fawcett, D. Nislick, R. Crocombe and D. F. Flanders, "Optical, Tunable Filter-Based Micro-Instrumentation for Industrial Applications, ISA Technical papers Collection, **Volume 439**, (2003).

23 R. A. Crocombe, D. C. Flanders and W. Atia, "Micro-optical instrumentation for process spectroscopy", Proc. of SPIE, **5591**, 11-25 (2004).

24 E Fred Schubert, Light Emitting Diodes, Cambridge University Press, 2003, pp.283-287.

25 US Patent 6,339,603, Flanders and Kuznetsov, Tunable Laser with Polarization Anisotropic Amplifier for Fabry-Perot Filter Isolation, January 2002; US Patent 6,345,059 B1, Flanders, Short Cavity Tunable Laser with Mode Position Compensation, February 2002; US Patent 6,366,592 B1, Flanders, Stepped Etalon Semiconductor Wavelength Locker, April 2002.

26 US Patent 6,341,039 B1, Flanders, Whitney and Miller, Flexible Membrane for Tunable Fabry-Perot Filter, Jan. 22, 2002.26

27 International Publication No. WO 01/37023, Flanders, Whitney, Masghati and Racz, Mounting and Alignment Structures for Optical Components, May, 2001.

28 International Publication No. WO 01/67149, Masghati, Racz, Payer and Flanders, Bonder Chuck and Optical Component Interface, September, 2001.

Axsun Technologies, Inc.

1 Fortune Drive

Billerica, Massachusetts 01821

Tel: 978-262-0049

FAX: 978-262-0035

E-mail: info@axsun.com

www.axsun.com

© 2005 Axsun Technologies

05-02-084A